P201 SERIES

1. Operation Temperature Range : -40°C to +105°C
2. Dimensioning Shall Be Interpreted Per ANSI Y14.5M-1994
3. Contact Retention Force : 1.36kgf min. Per Contact

ORDERING INFORMATION

P201 - □□ - □ - □ - □□□

No. of Single Row Pos.

Plating
0 : 100μ" Min. Tin/Lead Plating Over All
2 : Gold Flash Over All
8 : 15μ" Min. Gold

Tail Length
L : Dim. D = 3.30 mm
Non : Dim. D = 2.70 mm

Optional For Modification Code

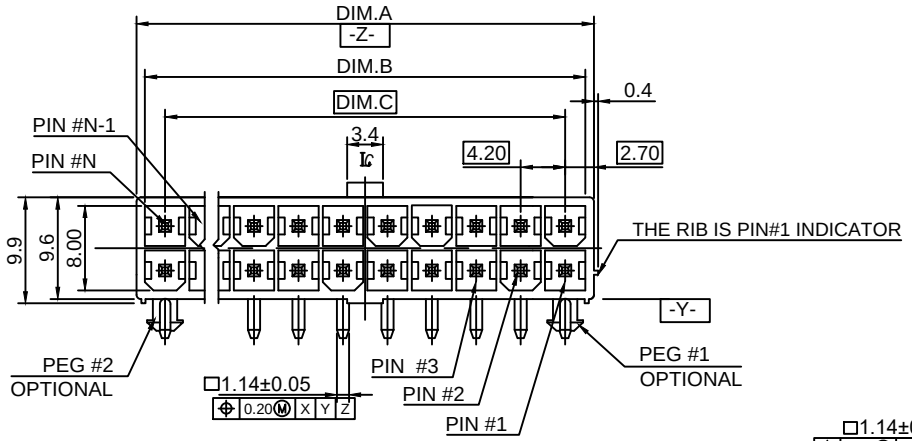

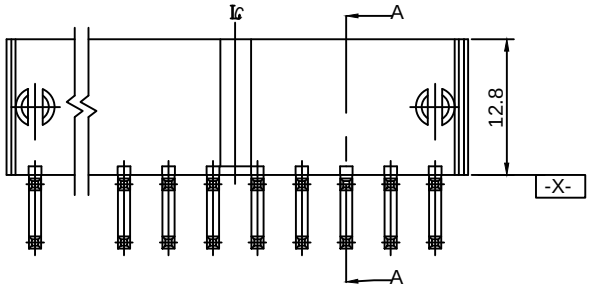

(TYPE I : POS. 3/6 - POS. 12/24)

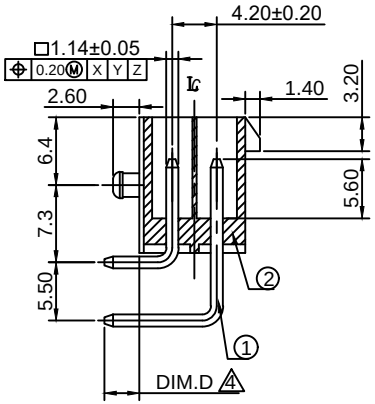

SEC A-A

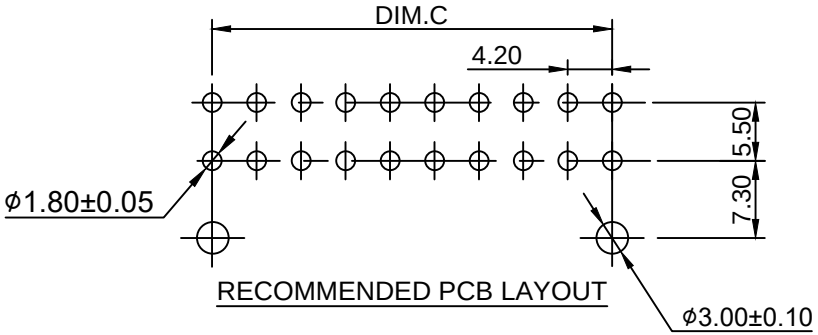

RECOMMENDED PCB LAYOUT

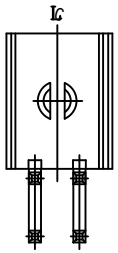

TYPE II : POS. 2/4

TYPE III : POS. 1/2

Part No.	No. of Pos.	Dim. A	Dim. B	Dim. C
P201 - 12 - □ - □□□	12/24	51.6	50.00	46.20
P201 - 11 - □ - □□□	11/22	47.4	45.80	42.00
P201 - 10 - □ - □□□	10/20	43.2	41.60	37.80
P201 - 09 - □ - □□□	9/18	39.0	37.40	33.60
P201 - 08 - □ - □□□	8/16	34.8	33.20	29.40
P201 - 07 - □ - □□□	7/14	30.6	29.00	25.20
P201 - 06 - □ - □□□	6/12	26.4	24.80	21.00
P201 - 05 - □ - □□□	5/10	22.2	20.60	16.80
P201 - 04 - □ - □□□	4/8	18.0	16.40	12.60
P201 - 03 - □ - □□□	3/6	13.8	12.20	8.40
P201 - 02 - □ - □□□	2/4	9.6	8.00	4.20
P201 - 01 - □ - □□□	1/2	5.4	3.80	

ITEM	Q'TY	DESCRIPTION
②	1	Insulator : Nylon 66 UL94V-0 Color : Ivory
①	BASE ON POS.	Contact : Brass 50μ" Min. Nickel Under Plated

COMPONENT PARTS LIST

◎MODIFICATION CODE

CODE	DESCRIPTION	
	PEG	PIN MISSING
NONE	None	Full Pin
G2	Peg #1 & Peg #2	Full Pin
G1	Peg #1	Full Pin

Title : Customer Drawing	Type : Power Connector		CTL 彩電企業股份有限公司 CHARTRON INCORPORATION		
Part No. : P201 Series			Tolerances Unless Otherwise Specified : X. ± 0.50 .X ± 0.38 .XX ± 0.25 X.° ± .X° ± .XX° ±		
Description : P201 Power Connector					
DWG No. : 010 - 0002 - 430	Date : 01 - Aug. - 2004		Dim.	Scale	Sheet	Rev.
APPD. : James C.	CHK. : Connie Z.	DRW. : Bryant C.	mm	N/A	1 of 1	A